SANSUI TU-666 SCHEMATIC DIAGRAM

Sansui

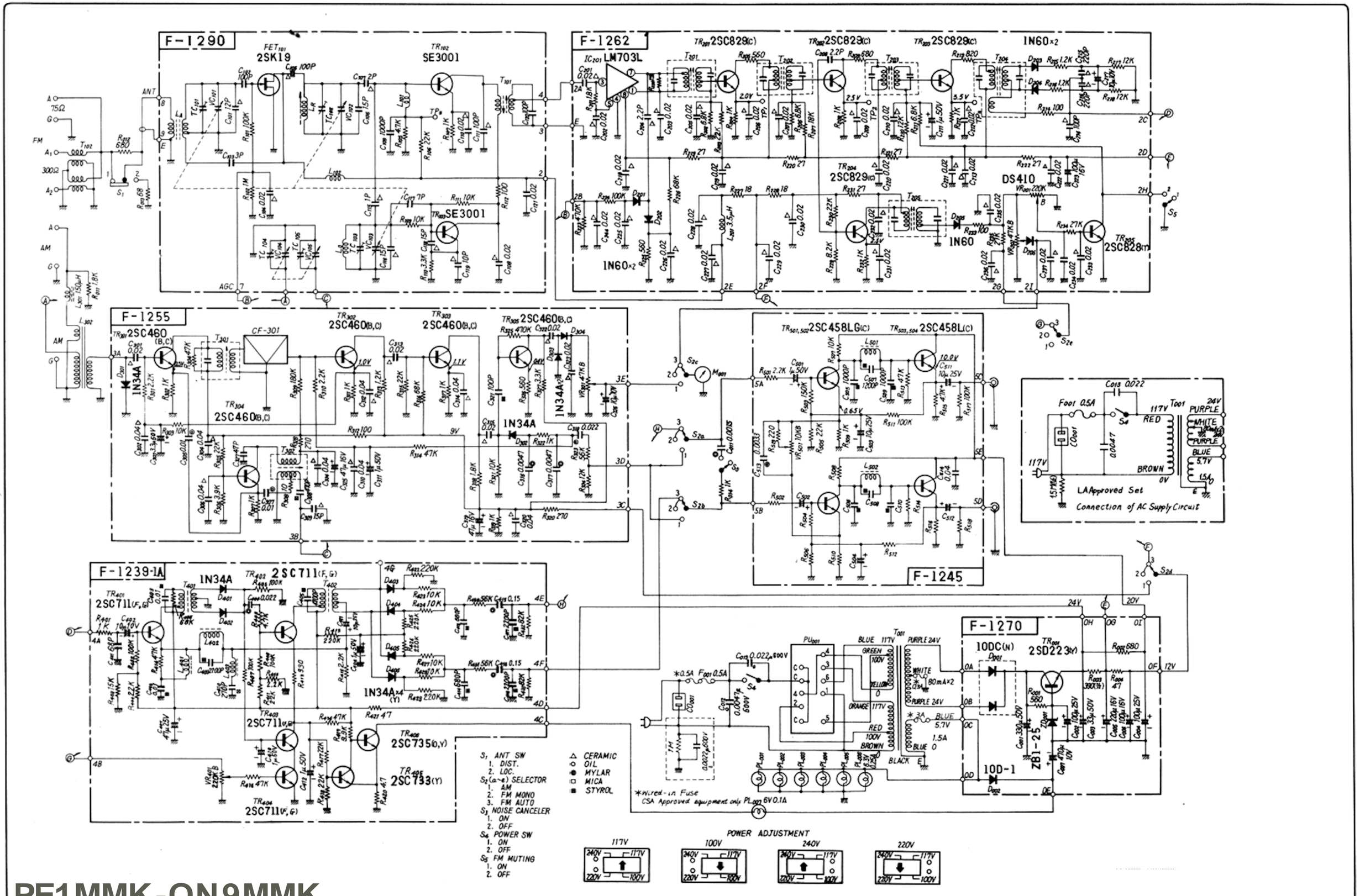

PE1MMK-ON9MMK